PKE Security Wiring Diagram

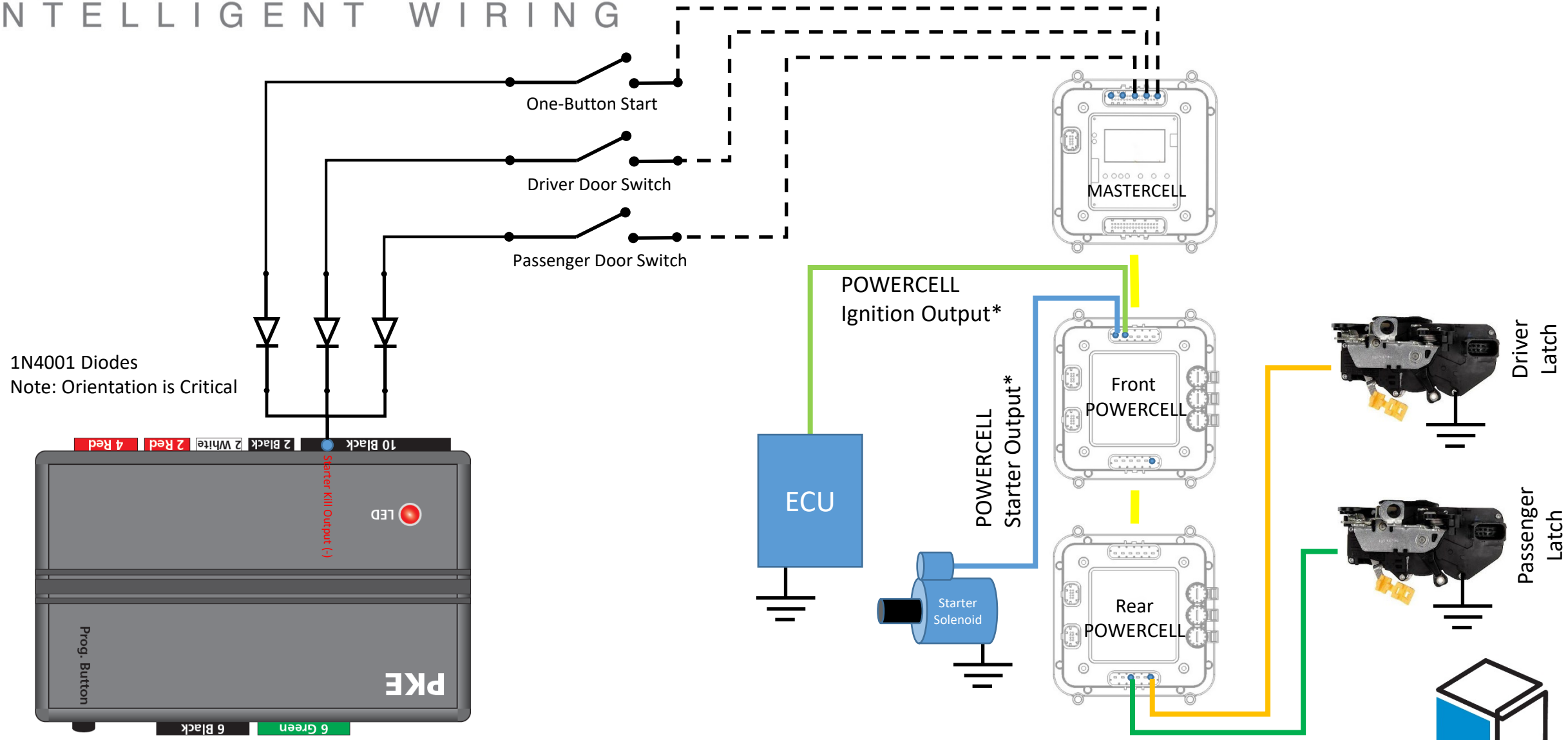

*NOTE: Wire colors & connector positions will vary for different kits. See the Configuration Sheet that came with your kit for exact wire colors and locations.

**NOTE: MASTERCELL inputs must be ground switched. Applying 12-volts directly to an input will damage the MASTERCELL and void the warranty.